Drawing Timing Diagram

What is a Timing Diagram?

- graphical representation where the 8085 instruction timing diagram represents the execution time of each instruction in graphical format.

Useful Terms

- **Clock Signal:** The time required to execute an instruction is called a clock cycle.
- **Machine Cycle:** The time required to access memory or input/output devices is called a machine cycle. The 8085 has 5 basic machine cycles i.e., load opcode, read from memory, write to memory, read I/O, and write I/O.
- **T-State:** A machine cycle and an instruction cycle take several clock periods. The portion of an operation performed in one system clock period is called a T-state.
- **Control Signals:** The control signal controls the operations. Common signals are ALE (address block enable), RD (read), WR (write), and IO/M (input/output) memory.

Machine Cycle of 8085

- The 8085 microprocessor has 5 basic machine cycles.
  - Opcode Fetch {4T- state}
  - Memory Read {3T- state}
  - Memory Write {3T- state}
  - I/O Read {3T- state}
  - I/O Write {3T- state}

Opcode Fetch Machine Cycle of 8085

- Each processor instruction has a one byte opcode.
- Operation codes are stored in memory. Thus, the processor performs an opcode load machine cycle to load the opcode from memory.
- Thus, each instruction begins with a machine cycle of opcodes.
- The time the processor takes to perform an opcode load cycle is 4T.
- At this time, the first, 3T-states are used to load the opcode from memory, and the remaining T-states are used for internal opcodes.

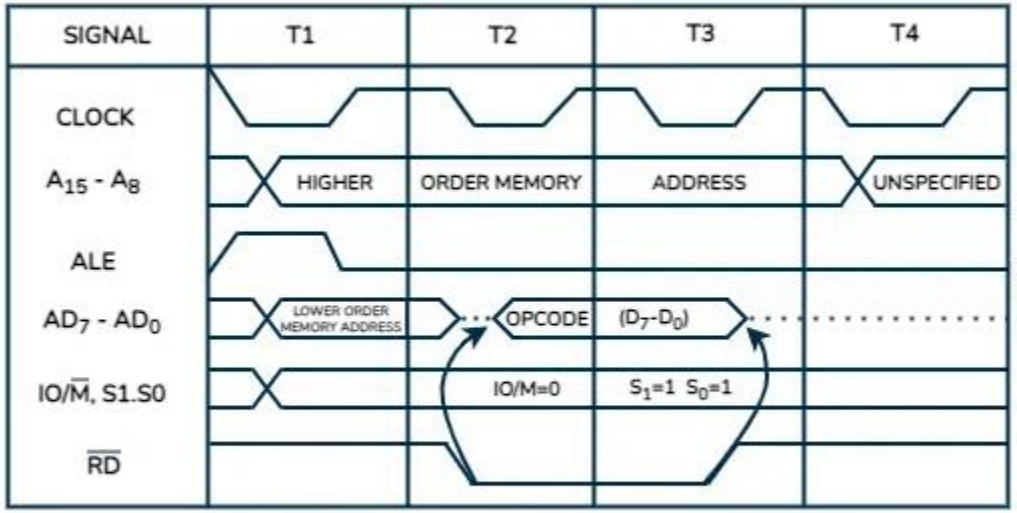
SIGNAL
T1
T2
T3
T4
CLOCK
A15 - A8
HIGHER
ORDER MEMORY
ADDRESS
UNSPECIFIED
ALE
AD7 - AD0
LOWER ORDER MEMORY ADDRESS
OPCODE
(D7-D0)
IO/M, S1.S0
IO/M=0
S1=1 S0=1
RD

Memory Read Machine Cycle of 8085

- A memory read machine cycle is executed by the processor to read a data byte from memory.
- The processor takes 3T states to perform this cycle.
- Instructions that have more than one byte word will use machine cycle after machine cycle to load the opcode.

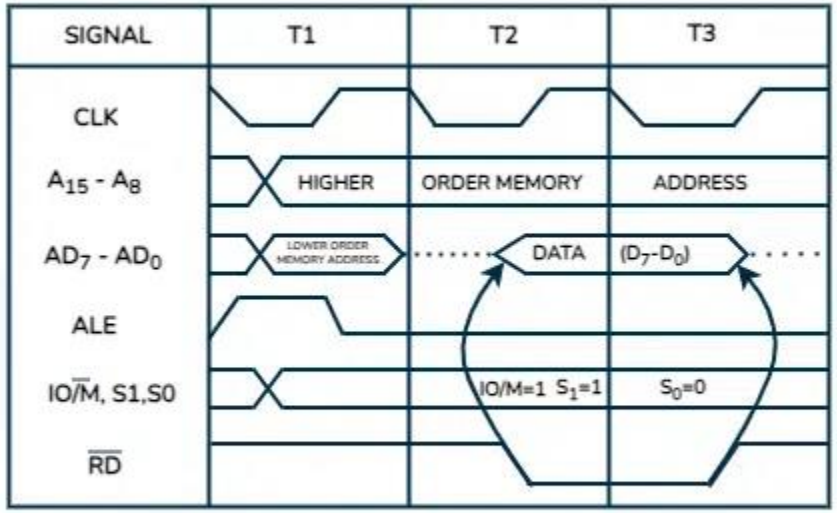
SIGNAL
T1
T2
T3
CLK
A15 - A8
HIGHER
ORDER MEMORY
ADDRESS
AD7 - AD0
LOWER ORDER MEMORY ADDRESS
DATA
(D7-D0)
ALE
IO/M, S1,S0
IO/M=1 S1=1
S0=0
RD

Memory Write Machine Cycle of 8085

- A write-to-memory machine cycle is executed by the processor to write a data byte to memory.
- The processor takes 3T states to perform this cycle.
- Instructions that have more than one byte word will use machine cycle after machine cycle to load the opcode.

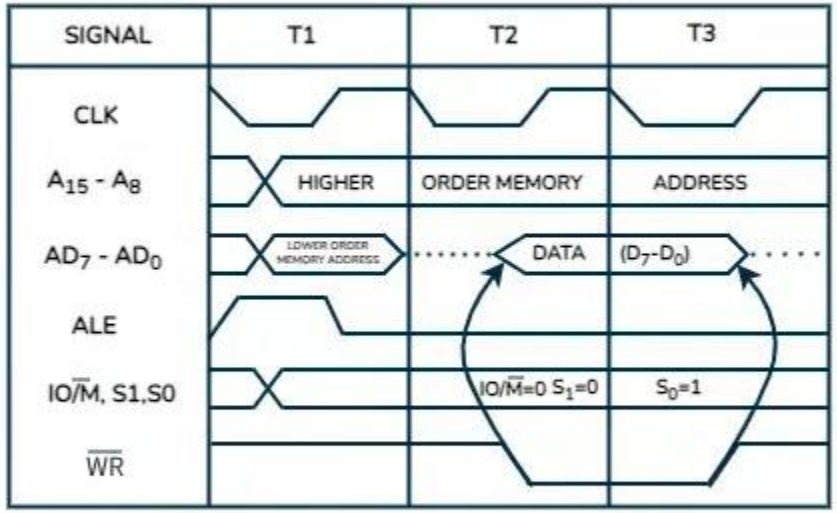
SIGNAL
T1
T2
T3
CLK
A15 - A8
HIGHER
ORDER MEMORY
ADDRESS
AD7 - AD0
LOWER ORDER MEMORY ADDRESS
DATA
(D7-D0)
ALE
IO/M, S1,S0
IO/M=0 S1=0
S0=1
WR

I/O Read Machine Cycle

- A reader I/O cycle is performed by the processor to read a data byte from an I/O port or peripheral that is I/O mapped in the system.
- The processor needs 3T states to execute this machine cycle.

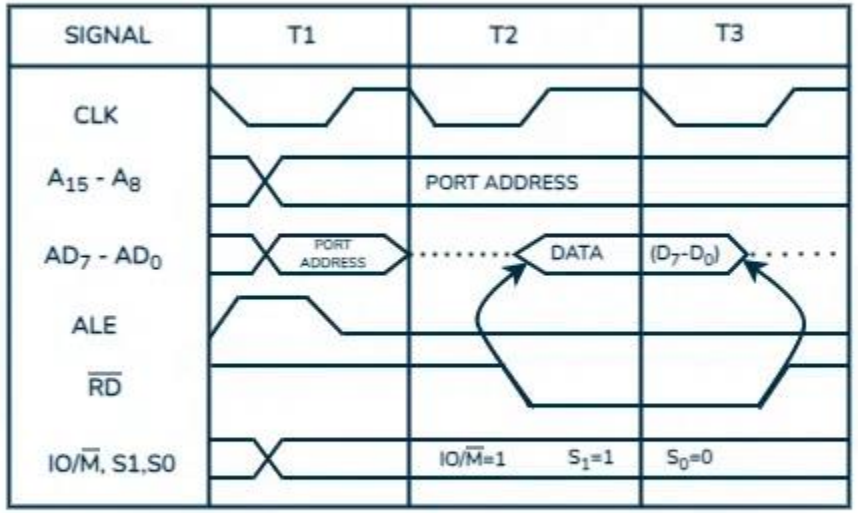
SIGNAL
T1
T2
T3
CLK
A15 - A8
PORT ADDRESS
AD7 - AD0
PORT ADDRESS
DATA
(D7-D0)
ALE
RD
IO/M, S1,S0
IO/M=1
S1=1
S0=0

I/O Write Machine Cycle

- A writer's I/O cycle is executed by the processor to write a data byte to an I/O port or peripheral that is I/O mapped in the system.
- The processor needs 3T states to execute this machine cycle.

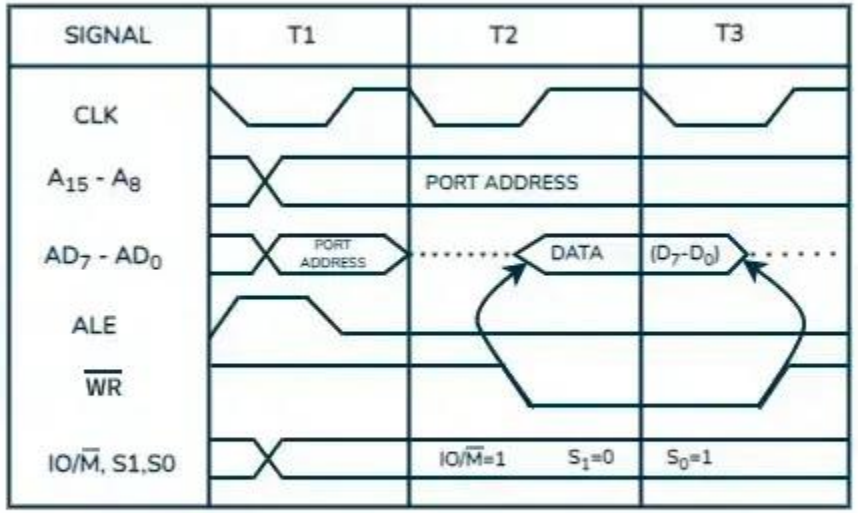
SIGNAL
T1
T2
T3
CLK
A15 - A8
PORT ADDRESS
AD7 - AD0
PORT ADDRESS
DATA
(D7-D0)
ALE
WR
IO/M, S1,S0
IO/M=1
S1=0
S0=1

Timing Diagram of Some Instructions

- MVI A,45
- STA 8000H
- INR M

Timing Diagram of MVI A,45

- Loading opcode 4EH from memory 2000H. (Operation Code Loading Machine Cycle)
- Read (move) data 45H from memory 2001H. (memory reading).

Address	Mnemonics	Opcode
2000H	MVI A,45H	4EH
2001H		45H

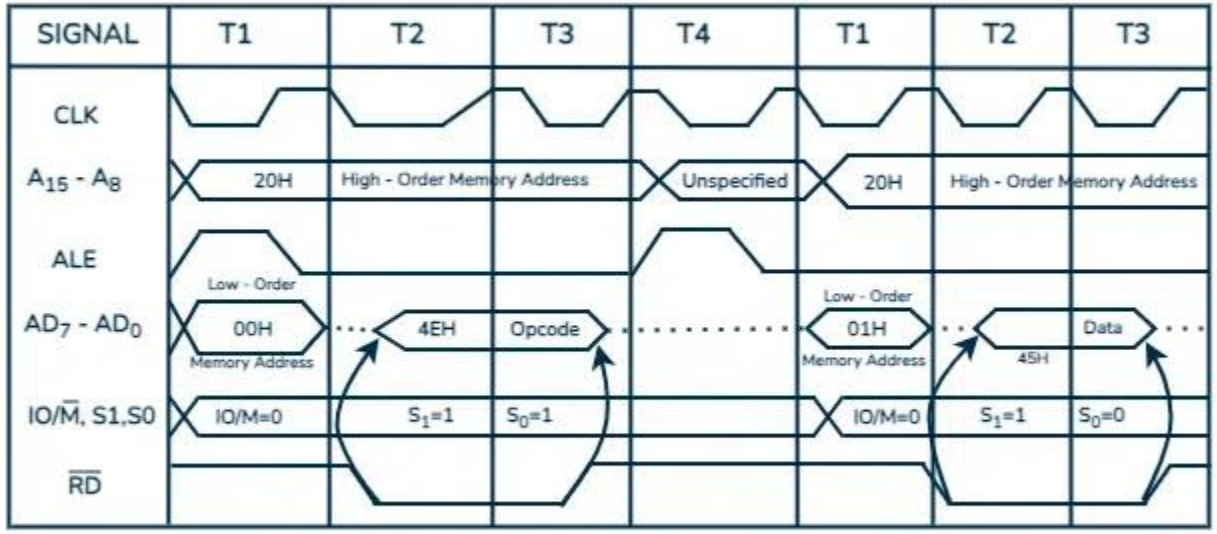
SIGNAL
T1
T2
T3
T4
T1
T2
T3
CLK
A15 - A8
20H
High - Order Memory Address
Unspecified
20H
High - Order Memory Address
ALE
Low - Order
AD7 - AD0
00H
Memory Address
4EH
Opcode
Low - Order
01H
Memory Address
45H
Data
IO/M, S1,S0
IO/M=0
S1=1
S0=1
IO/M=0
S1=1
S0=0
RD

Timing Diagram of STA 8000H

- STA stands for Store Accumulator - the contents of the accumulator are stored at (1000H).
- The transaction code of STA indicates 32H. It is provided by 1000H memory (see picture). - In the machine cycle.
- Then read the sub address (00). - Memory reading machine cycle
- Read higher memory location (80) – Memory read machine cycle.
- Consider the combination of the two addresses and write the details of the accumulator for 8000. - Don't forget to write the machine cycle
- Assume the memory address for the instruction and let the content of accumulator is C7H. So, C7H from accumulator is now stored in 8000H.

Address	Mnemonics	Opcode
1000H	STA 8000H	32H
1001H		00H
1002H		80H

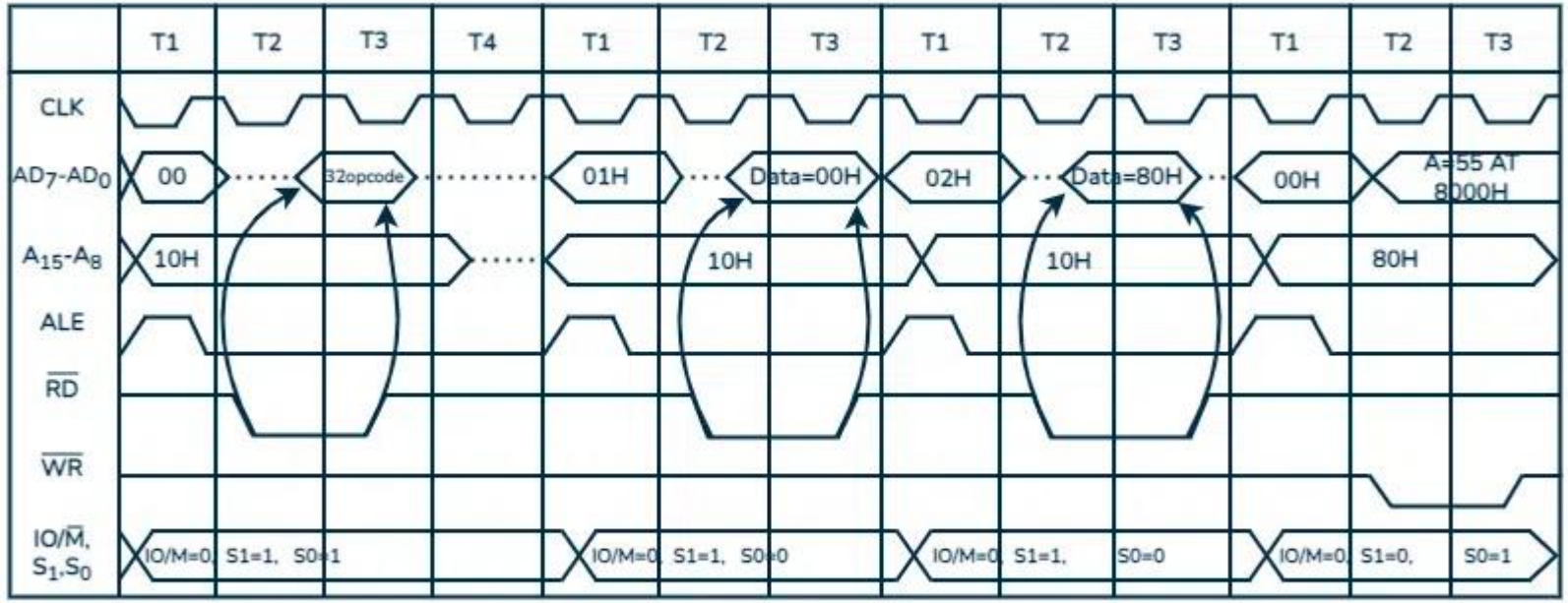

Timing Diagram of INR M Instructions

- C500H INR M 34H
- D050 as memory address
- E1H and E2H as opcode

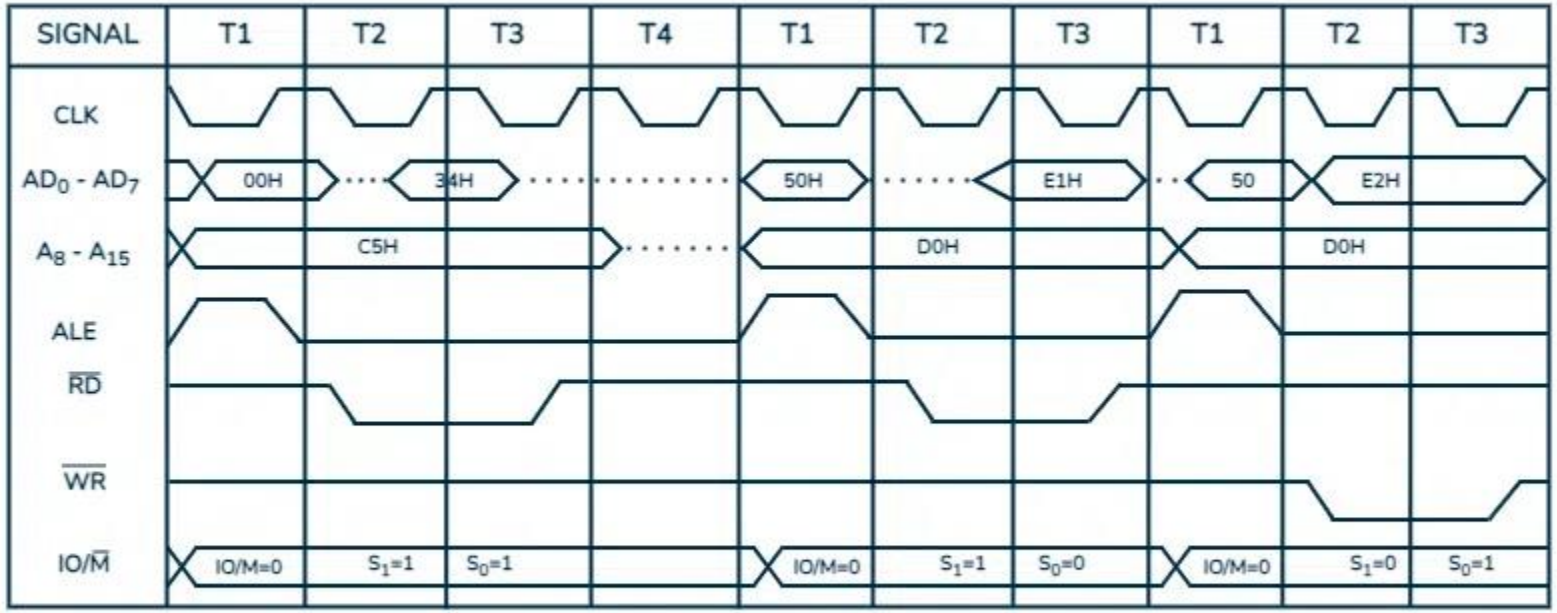

Timing Diagram 8085 Microprocessor

Applications 0f 8085

- System charts keep track of all changes occurring in the system.
- Timelines provide a more accurate representation of physical activity.
- The timing table of 8085 instructions graphically represents the time required to execute each instruction.
- Timing Diagram is a special form of sequence diagram.
- Timing Diagram keep track of every change that occur in the system.
- The timing diagram is important for planning the clock frequency of the microprocessor.
- The timing diagram helps design memory circuits that meet the required set and hold times during read and write operations.

- The timing diagram of the 8085 microprocessor looks like a brief overview of how the microprocessor works during operation. It helps engineers solve problems, create good memories and interactions between devices, make quick decisions, and do good, on-time work. For students, it simplifies the learning process by providing a visual representation of the inner workings of a microprocessor. Essentially, it serves as a guide for understanding, troubleshooting and optimizing the performance of the 8085 microprocessor.